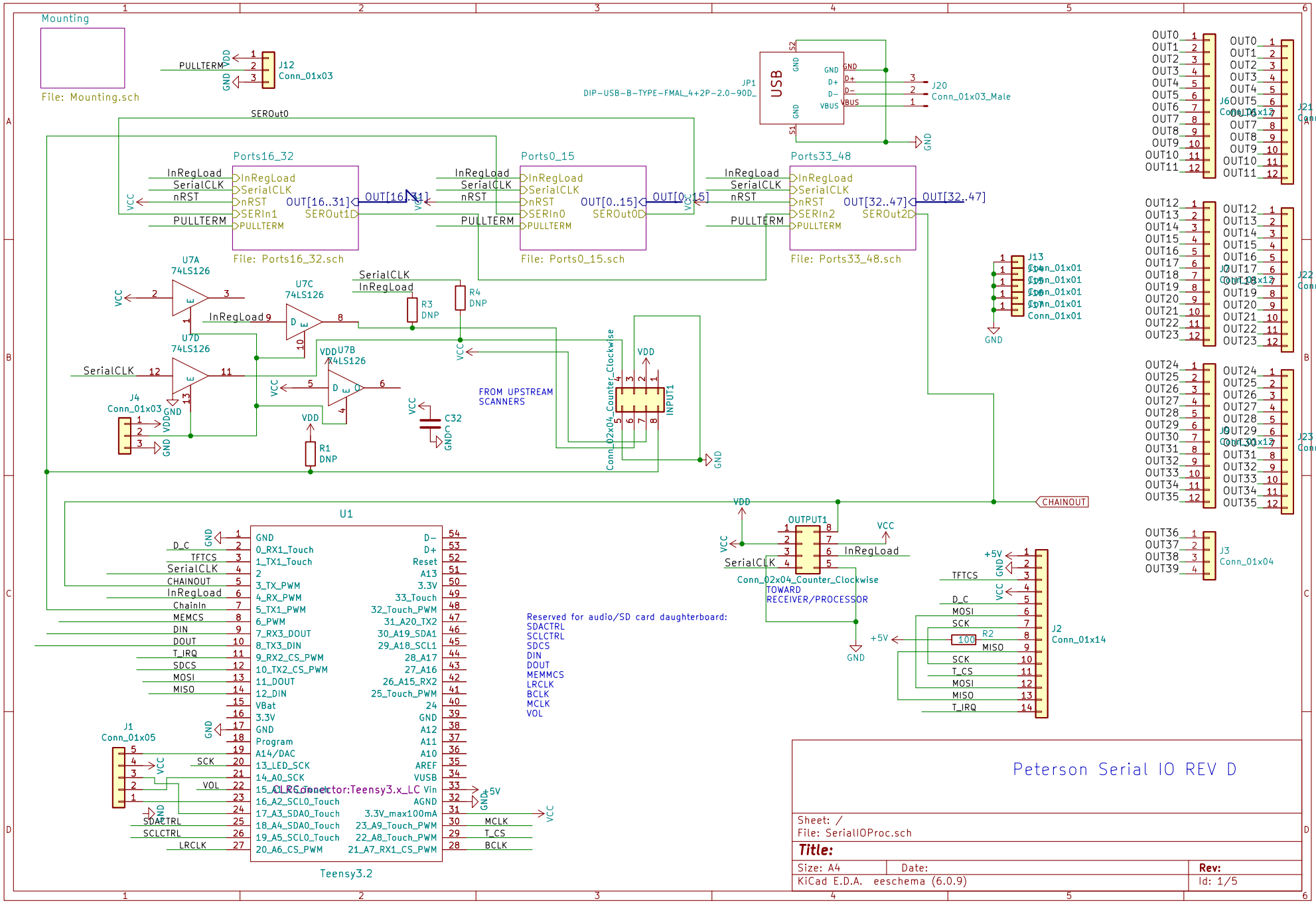
Mounting
File: Mounting.sch
PULLTERM
J12
Conn_01x03
SEROut0
JP1
DIP-USB-B-TYPE-FMAL_4+2P-2.0-90D_
USB
J20
Conn_01x03_Male
Ports16_32
File: Ports16_32.sch
OUT[16..31]
Ports0_15
File: Ports0_15.sch
OUT[0..15]
Ports33_48
File: Ports33_48.sch
OUT[32..47]
InRegLoad
SerialCLK
nRST
PULLTERM
U7A
74LS126
U7C
74LS126
U7D
74LS126
U7B
74LS126
R3
DNP
R4
DNP
R1
DNP
C32
J4
Conn_01x03
FROM UPSTREAM
SCANNERS
Conn_02x04_Counter_Clockwise
INPUT1
J13
Conn_01x01
J6
Conn_01x12
J21
Conn_01x12
J7
Conn_01x12
J22
Conn_01x12
J9
Conn_01x12
J23
Conn_01x12
J3
Conn_01x04
CHAINOUT
U1
Teensy3.2
Reserved for audio/SD card daughterboard:
SDACTRL
SCLCTRL
SDCS
DIN
DOUT
MEMMCS
LRCLK
BCLK
MCLK
VOL
OUTPUT1
Conn_02x04_Counter_Clockwise
TOWARD
RECEIVER/PROCESSOR
J2
Conn_01x14
R2
100
J1
Conn_01x05
Peterson Serial IO REV D
Sheet: /
File: SerialIOProc.sch
Title:
Size: A4
Date:
Rev:
KiCad E.D.A. eeschema (6.0.9)
Id: 1/5

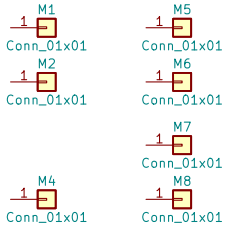

Sheet: /Mounting/
File: Mounting.sch

Title:

Size: A4	Date:	**Rev:**
KiCad E.D.A. eeschema (6.0.9)		Id: 2/5

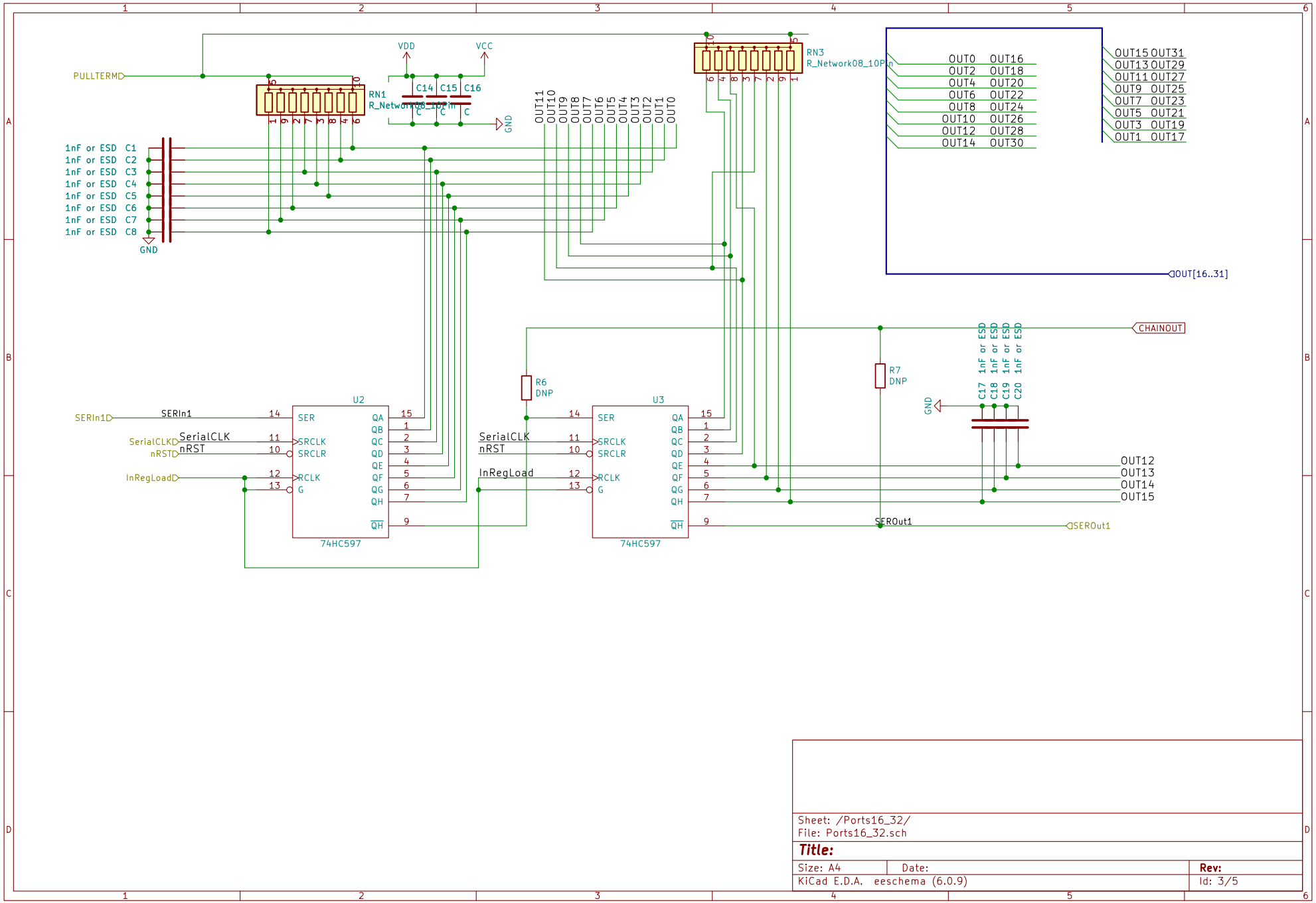

Sheet: /Ports16_32/
File: Ports16_32.sch

Title:

Size: A4	Date:	Rev:
KiCad E.D.A. eeschema (6.0.9)		Id: 3/5

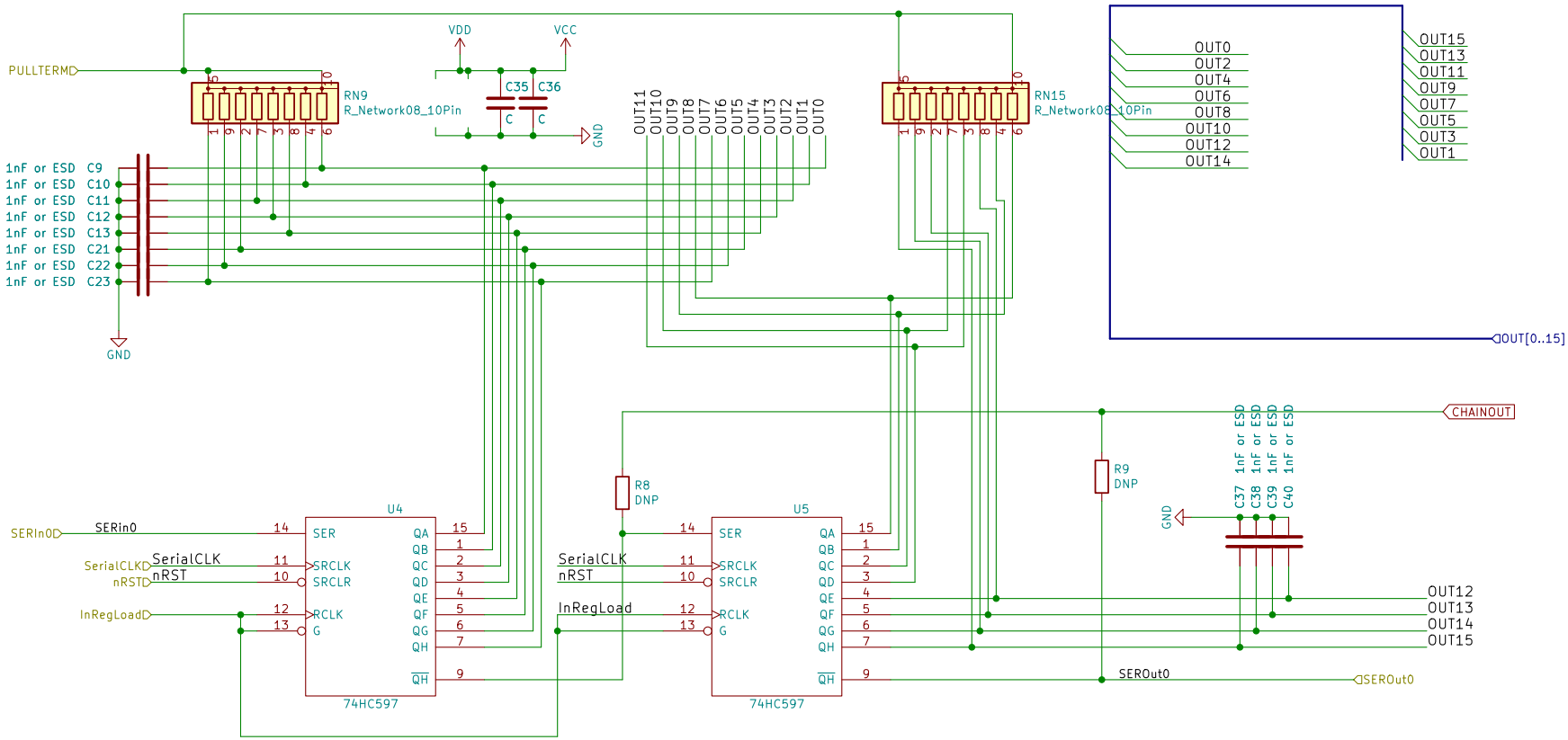

Sheet: /Ports0_15/
File: Ports0_15.sch

Title:

Size: A4	Date:	Rev:
KiCad E.D.A. eeschema (6.0.9)		Id: 4/5

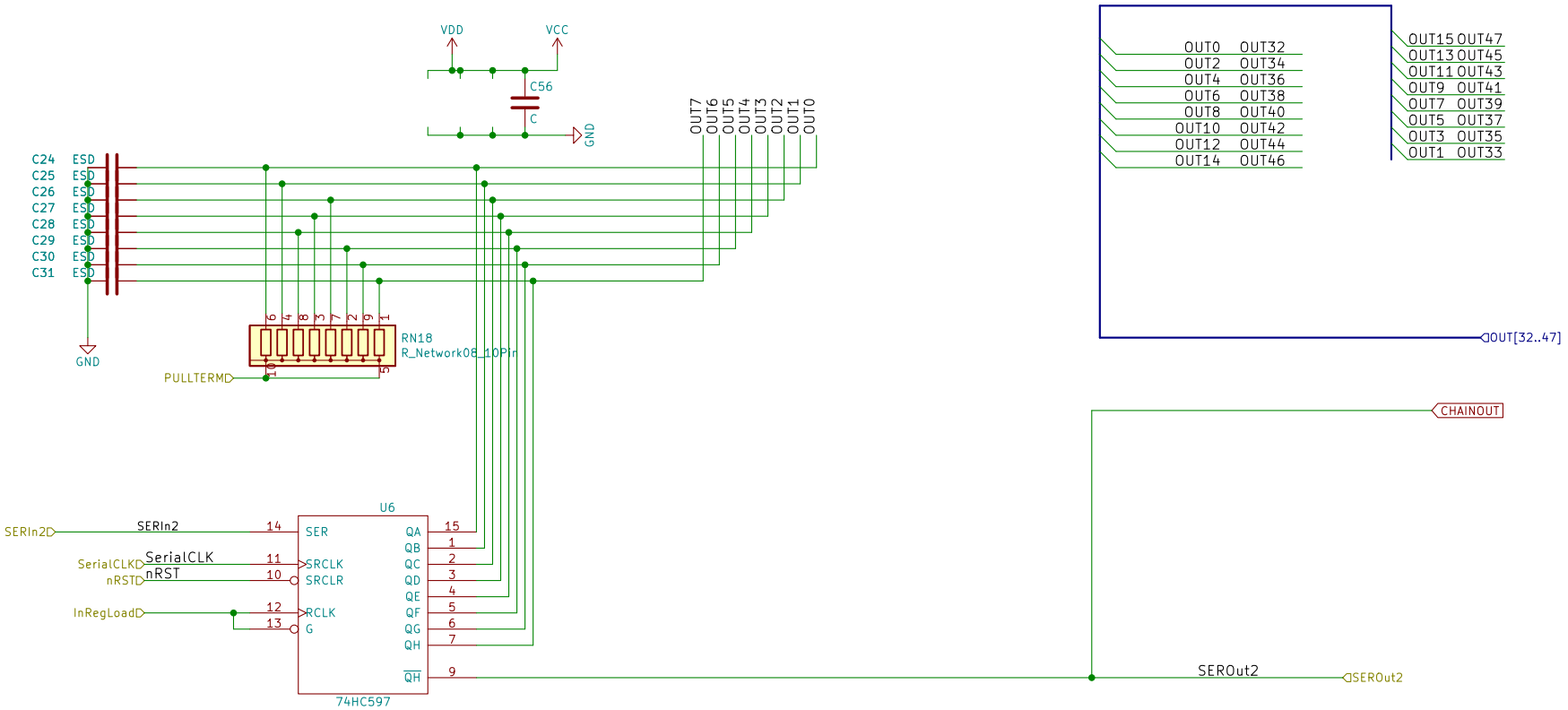

Sheet: /Ports33_48/
File: Ports33_48.sch

Title:

Size: A4	Date:	**Rev:**
KiCad E.D.A. eeschema (6.0.9)		Id: 5/5